Iris E-course
Innovation through Education

Introduction to the Iris Robot Platform
Appendix D: Clawbot Assembly

Presented By:

Higher Order Innovation

www.higherorderinnovation.com

Updated September 22, 2022

Appendix D: Clawbot Assembly

D.1 Open Robotics Kit

Unpack your kit and assemble your storage box. Dividers are included inside the case. Keeping all of your components organized will aid in the creation of your robot on the following steps. It is recommended that the small bolts/screws/nuts for use with the motors are kept in their ziploc bags to keep them from being lost.

Mechanical contents

- (5) 6" aluminum framing pieces
- (5) 12" aluminum framing pieces
- (5) 17.5" aluminum framing pieces
- (15) corner brackets
- (100) 8-32 x 1/4" button socket cap bolts
- (100) 8-32 x 5/16" button socket cap bolts
- (100) 8/32 x 1/4" narrow hex nuts
- (100) 8/32 x 3/8" hex head bolts
- (100) #8 washers
- (20) 1/2" standoffs
- (10) 1" standoffs
- (10) 2" standoffs
- (4) inner wheel plates
- (4) outer wheel plates
- (4) inner wheel hubs
- (10) motor attachment yokes
- (1) mobile jaw top plate for claw
- (1) fixed jaw top plate for claw
- (2) jaw bottom plates for claw
- (12) motor mounting plates
- (12) sets of motor mounting brackets
- (1) set of motor mounting hardware (includes 2mmx6mm bolts, 2mm nuts, 1.5mm screws, and 3mm coupler attachment bolts)
- (12) driven motor couplers
- (12) driving motor couplers
- (1) screwdriver toolkit
- (10) rubber bands

Electrical contents

- (1) Iris Robot Platform kit which includes:
  - (1) Iris Robot printed circuit board
  - (2) wheels
  - (1) aluminum hex standoff
  - (2) UNC 8-32 bolts
  - (1) USB micro power/programming cable
  - (4) rechargeable AA batteries
  - (1) AA battery charger
  - (1) Infrared remote
- (1) Iris Dock
- (12) digital servo motors
- (12) 8" servo connection cables
- (1) 22" servo connection cable
- (1) 34" servo connection cable
- (2) NiMh batteries
- (1) NiMh battery charger
- (1) PS4 remote

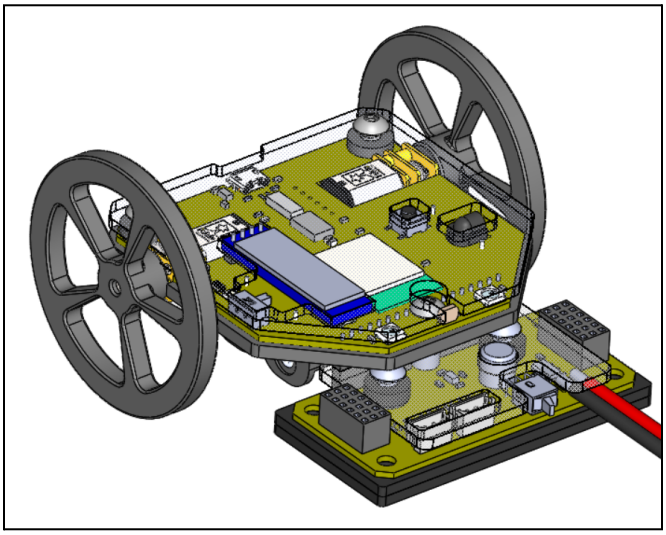

Figure 1: Iris Robot with Dock

When unpacking the PS4 controller and larger batteries, note that they all may need charging prior to use. The PS4 controller can be charged with the included USB micro cable and any USB port. The larger batteries can be charged one at a time with the included charger. Information about the indicators and options on the battery charger can be found in Figure 2 below.

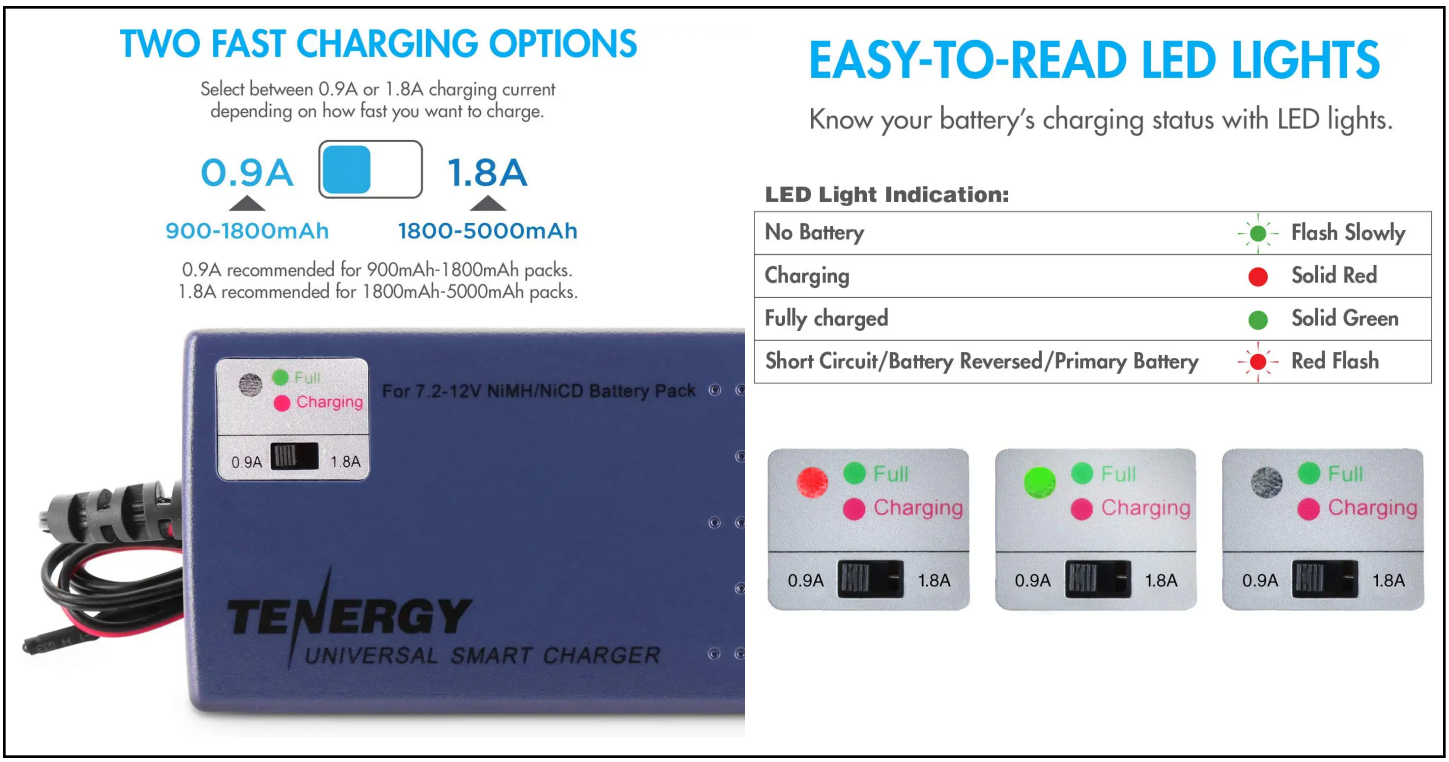

Figure 2: NiMh battery with smart charger

D.2 Iris Robot Platform and Dock

The Iris robot is a fully capable self-contained robot. It is able to sense and react to its environment while communicating and moving, allowing all kinds of exploration as the perfect introduction to robotics. However, when you are ready to expand beyond the included sensors and motors you can use the Iris Dock for further investigation.

To assemble and prepare the Iris Robot with Dock, work through the following sections of the Introduction to Iris ebook (**https://www.higherorderinnovation.com/resources.html**):

1. Chapter 1: Getting Started with Iris and Arduino
2. Appendix A: Iris Dock
3. Appendix C: Default Code with PS4

Practice driving Iris with the PS4 remote! Can you drive a figure-8 pattern? Try using tape, paper, and/or cardboard to make additions to Iris to help it push items around the table. Adding tape or paper to the bottom of the leg can aid in moving smoothly around different surfaces.

D.3 Driven vs driving motor coupler

Two different motor couplers are provided for each motor: one driven and one driving. The **driving motor coupler** is one that transmits power from the motor to an output. It "drives" the motion, hence the name. The motor has a brass spline (multi-pointed star) profile that mates with the back of the driving motor coupler. When the spline profile on the coupler aligns with the brass spline profile, the coupler can be pressed onto the motor. Securing it in place with a black coupler bolt.

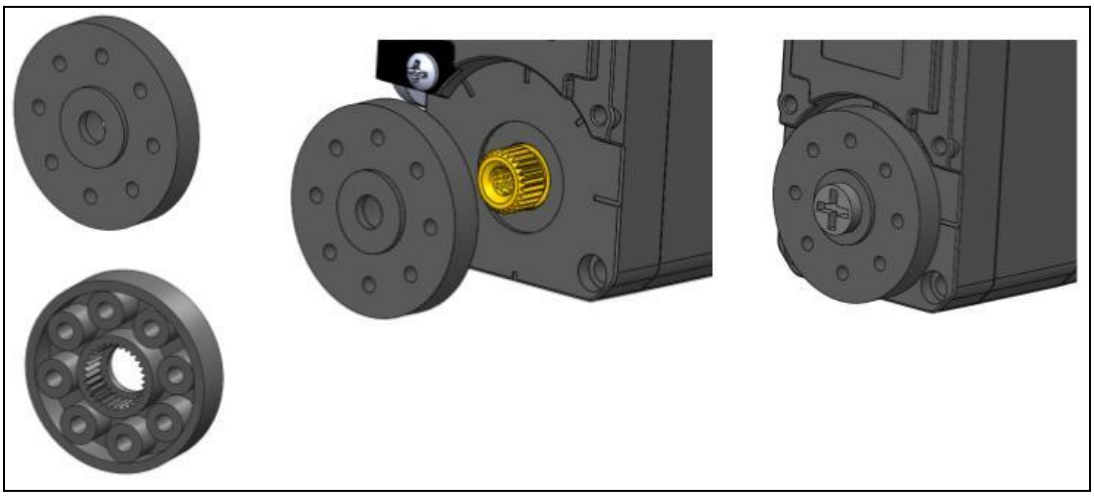

Figure 3: Driving motor coupler

The **driven motor coupler** is one that couples to the motor, but only acts as support. The rear side of the motor has a cylindrical post in line with the brass driveshaft. The driven motor coupler has a smooth inner surface that will ride smoothly on the post.

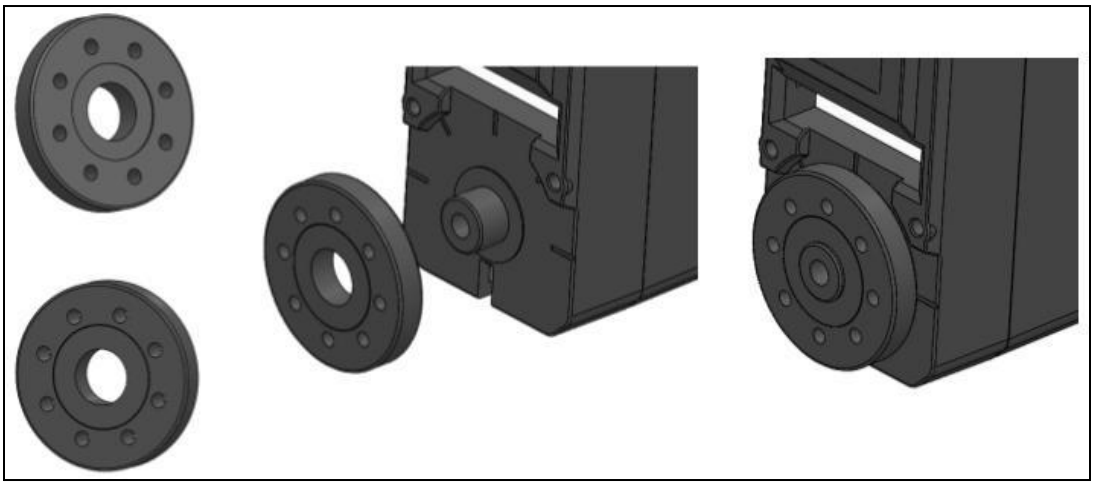

Figure 4: Driven motor coupler

D.4 Iris Clawbot

The remaining instructions in this appendix describe the construction of a basic four wheeled clawbot. The techniques and building methods can be adapted for more custom robots. Note that not all parts in the Open Robotics Kit will be used in the creation of this Iris Clawbot. The Iris Clawbot is made from six motors, four dedicated to driving, one for the shoulder, and one to operate the claw. The robot was designed to showcase the flexibility of the framing material as well as how to use flat material to construct a three-dimensional robot.

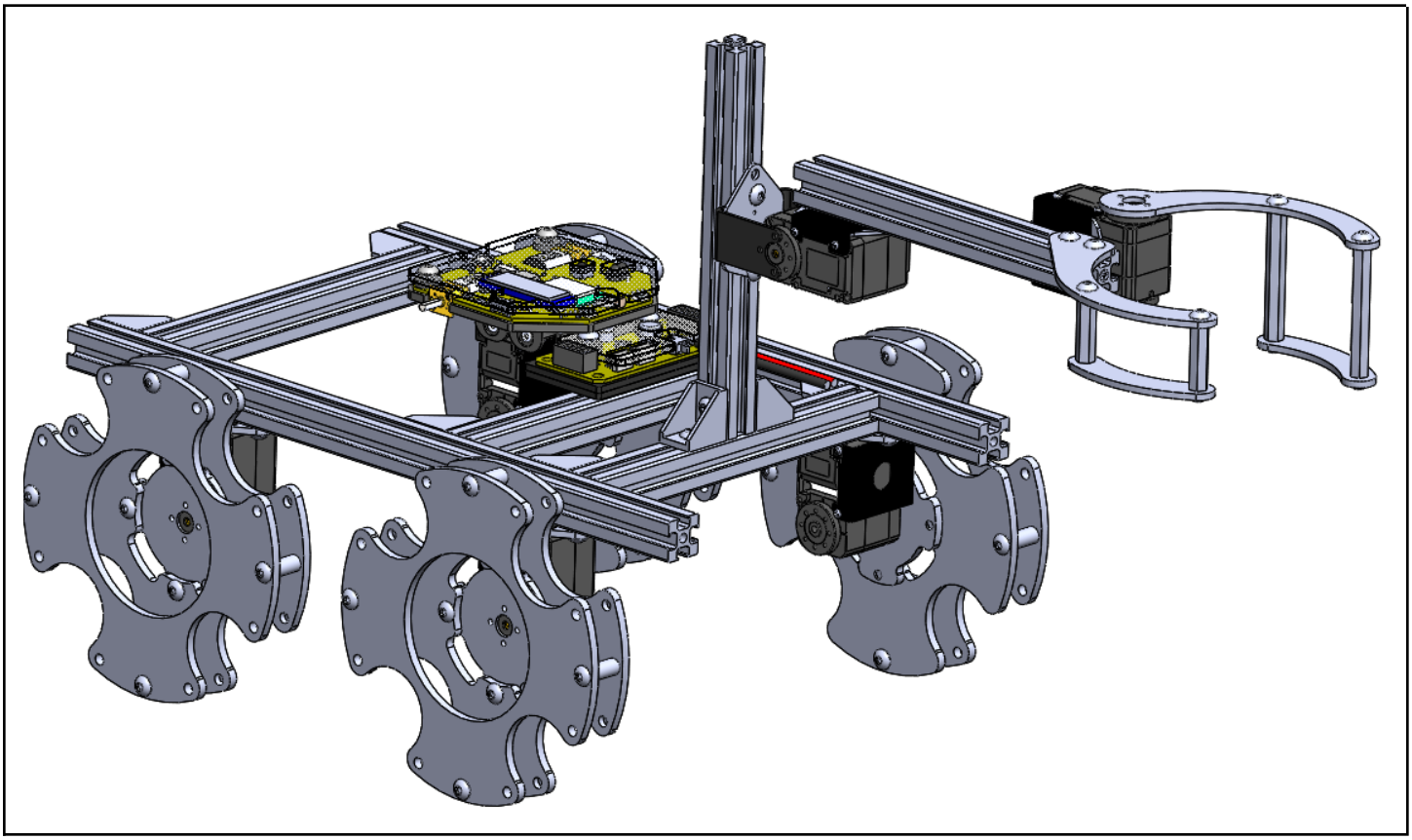

Figure 5: Fully constructed Iris Clawbot

D.5 Building the wheels

Each wheel is made from one inner wheel hub, one inner wheel plate, one outer wheel plate, twelve 8-32 x 1/4" button socket cap bolts, and four 1/2" standoffs. The wheels do not need to all be the same design, but four wheels in total should be assembled. Rubber bands have been included in the kit as an example of how tread may be added to the outside of the wheels if traction is needed.

1. **Attach inner wheel hub to inner wheel plate.** The inner wheel hub is the smallest round white plastic piece in the kit. The inner wheel plate has inner cutouts to attach to the hub. Use four 1/4" bolts to attach. The bolts will cut their own threads in the inner wheel hub. The bolts should be snug, but do not overtighten them.

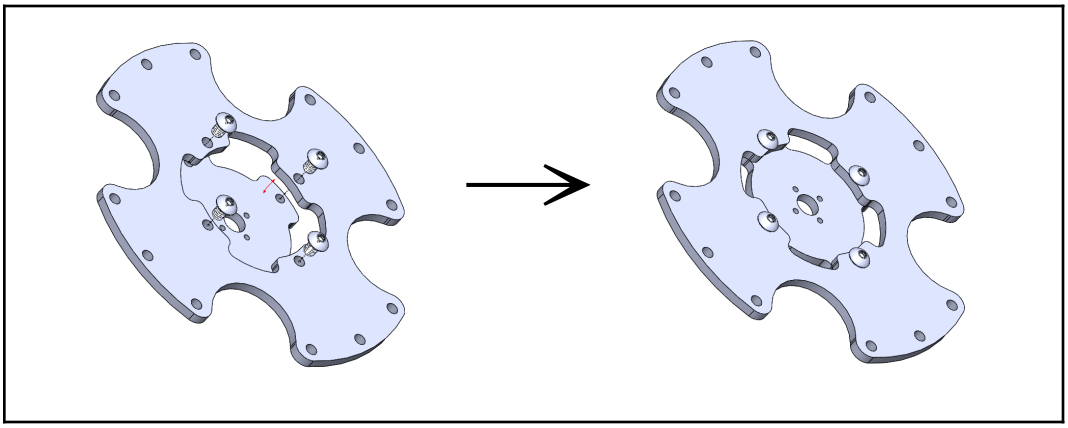

Figure 6: Inner wheel hub and plate attachment

2. **Attach standoffs to inner wheel plate.** Use four 1/4" bolts and four 1/2" standoffs.

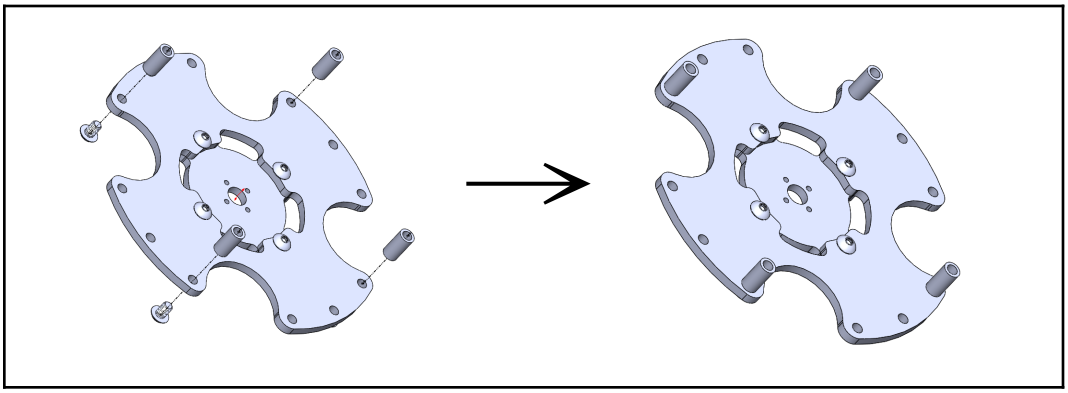

Figure 7: Standoff attachment to inner wheel plate

3. **Attach outer wheel plate.** Use four 1/4" bolts to attach.

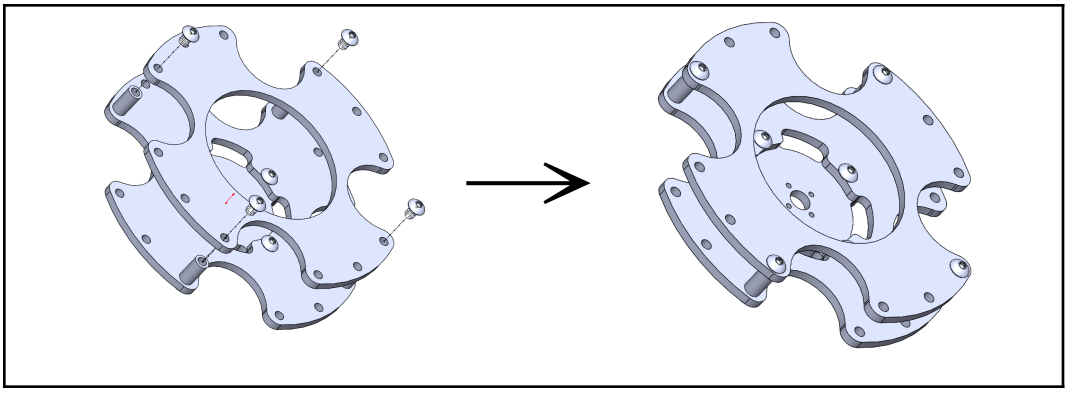

Figure 8: Outer wheel plate attachment

4. **Wheel design options.** There are two primary options for your wheel shape. It can be effectively round as shown in Figure A, or it can have more of a leg-wheel combination as shown in Figure B. The option in Figure B can be helpful when climbing over obstacles on the ground, as the legs help to lift up and over them without a reliance on traction. These two shapes are made with the same components, but where the bolts and standoffs attach the inner and outer wheel plates are slightly different.

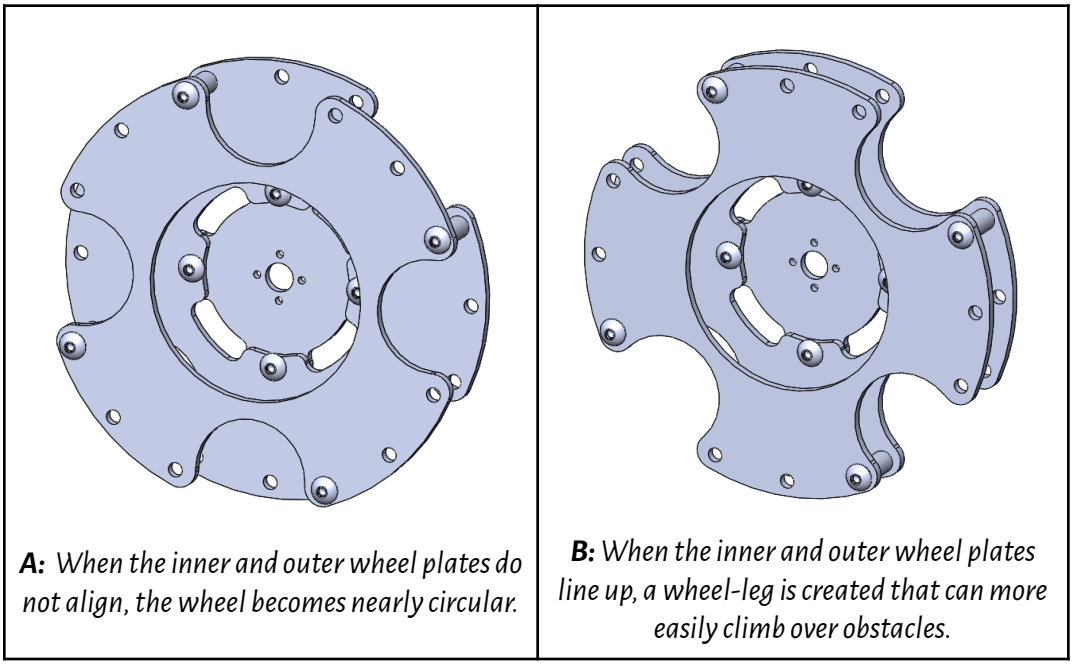

A: *When the inner and outer wheel plates do not align, the wheel becomes nearly circular.*

B: *When the inner and outer wheel plates line up, a wheel-leg is created that can more easily climb over obstacles.*

Figure 9: Wheel design options

D.6 Building the wheel assemblies

Each wheel assembly is made up of one digital servo motor, one motor mounting plate, one driving motor coupler (see section D.3 of this appendix), one end motor bracket, one wheel, two 8-32 x 1/4" button socket cap bolts, two 8/32 x 1/4" narrow hex nuts, and motor mounting hardware (includes 2mmx6mm bolts, 2mm nuts, 1.5mm screws, and 3mm coupler attachment bolts). Four of these assemblies will be created for the clawbot.

1. Attach driving motor coupler to digital servo motor using one 3mm black coupler attachment bolt.
2. Attach two 1/4" bolts and two narrow hex nuts to the motor mounting plate, making sure the bolts pass through the outer two holes.
3. Four 1.5mm pointed silver screws are used to attach the motor mounting bracket to the motor.
4. Four 2mm x 6mm bolts pass right to left to connect the wheel to the driving motor coupler.

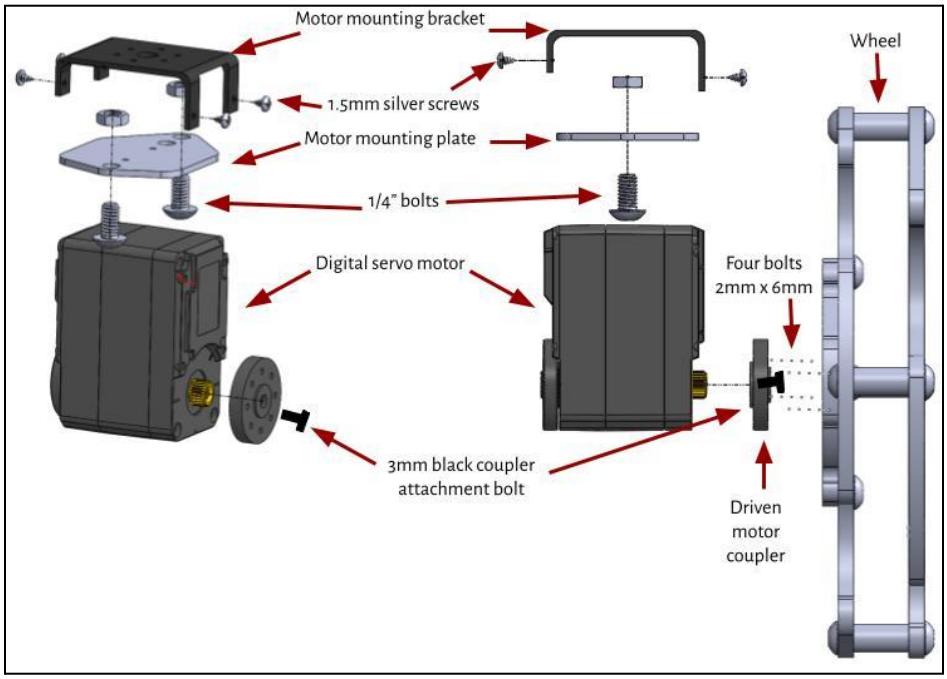

Figure 10: Wheel assembly process

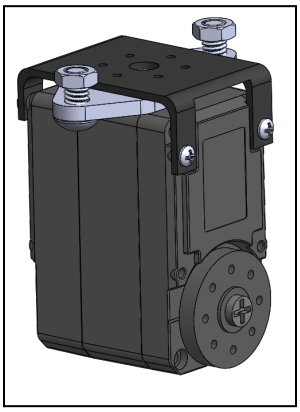

Figure 11: Completed motor for wheel assembly

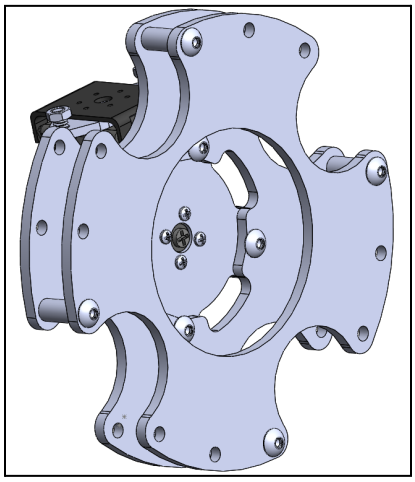

Figure 12: Completed wheel assembly

D.7 Constructing the clawbot frame

The frame is constructed from four 6” aluminum extrusions, two 12” aluminum extrusions, eight corner brackets, 8-32 x 1/4” button socket cap bolts, and 8/32 x 1/4” narrow hex nuts.

1. **Assemble corner brackets.** Each of the eight corner brackets can be prepared as shown below. One corner bracket, two ¼” long bolts, and two narrow hex nuts. Each hex nut should be twisted less than a single turn onto the bolts to provide clearance for assembly.

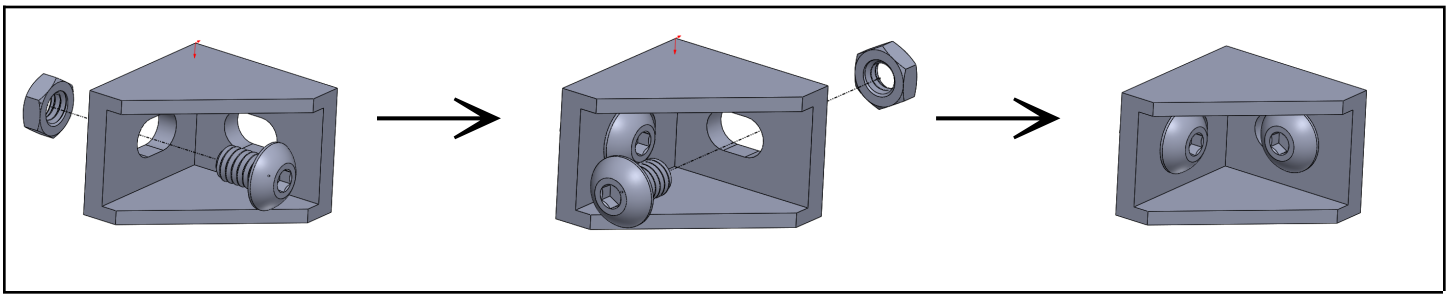

Figure 13: Corner bracket assembly

2. **Assemble crossmembers.** While holding the corner bracket, press your finger on the head of a bolt to extend it out the back of the bracket. Align the nut with the slot of a 6” extrusion and slide it into place and tighten the bolt. This will lock the corner bracket into position. Alternatively, you can insert the nut into the slot and line the bolt up manually for tightening. Assemble a total of three crossmembers.

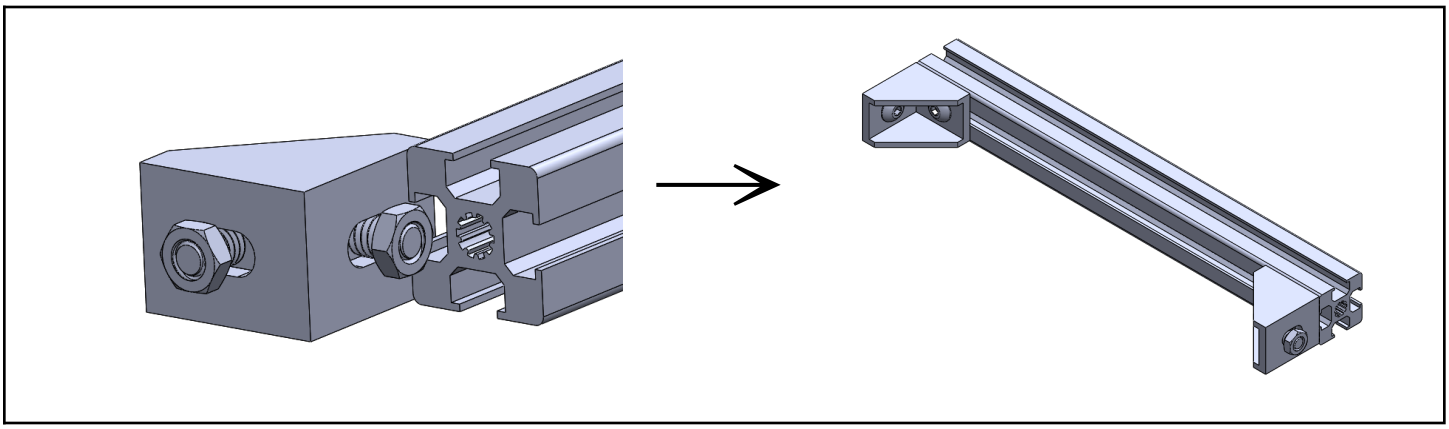

Figure 14: Crossmember assembly

3. **Assemble vertical arm support.** Using one of the 6” extrusion crossmembers created in the previous step, use another 6” extrusion and two corner brackets to assemble the vertical that will support the arm. The corner brackets supporting the vertical extrusion can be slid into place from either end of the crossmember.

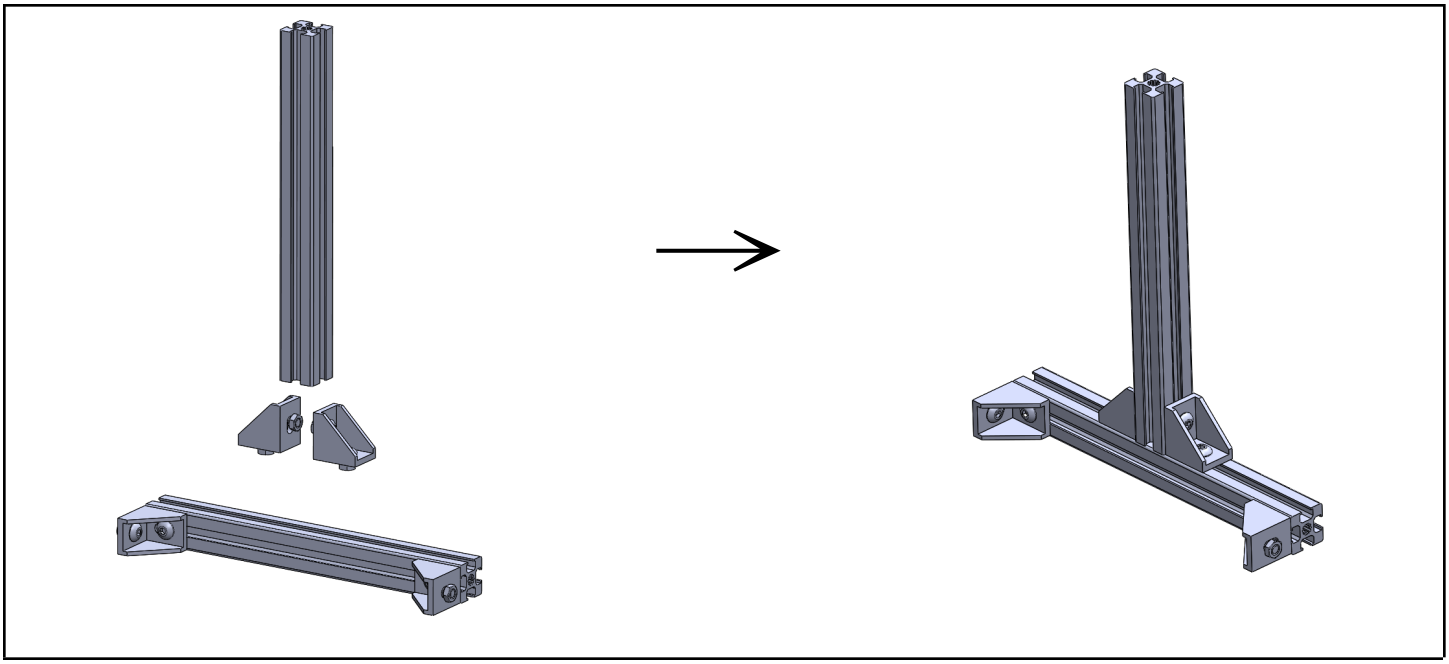

Figure 15: Vertical arm support assembly

4. **Assemble one side of the rail.** Using one of the 12” extrusions, slide the three crossmembers into one of the slots of the 12” rail. The position of these crossmembers is not critical and can be changed later.

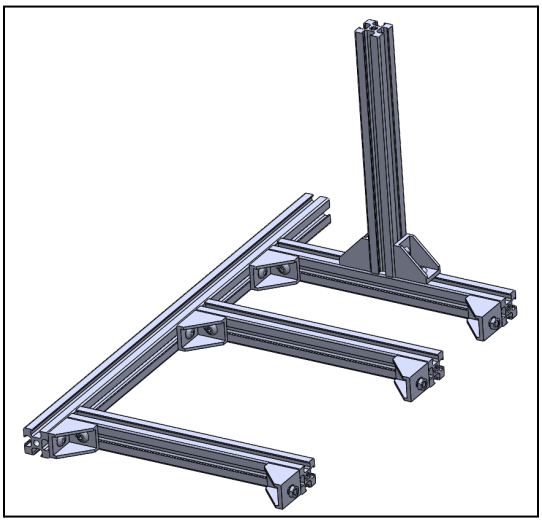

Figure 16: Frame with one side rail.

5. **Insert two hex nuts into the center crossmember.** The nuts should be inserted into the top slot of the center crossmember.

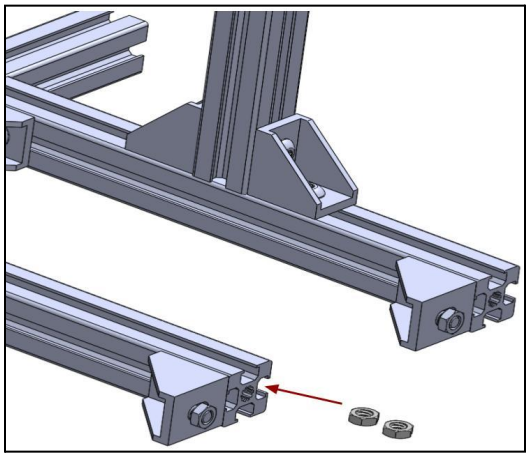

Figure 17: Hex nuts into center crossmember

6. **Finish rail assembly.** Slide the second 12" extrusion onto the three crossmembers until it lines up with the first 12" extrusion.

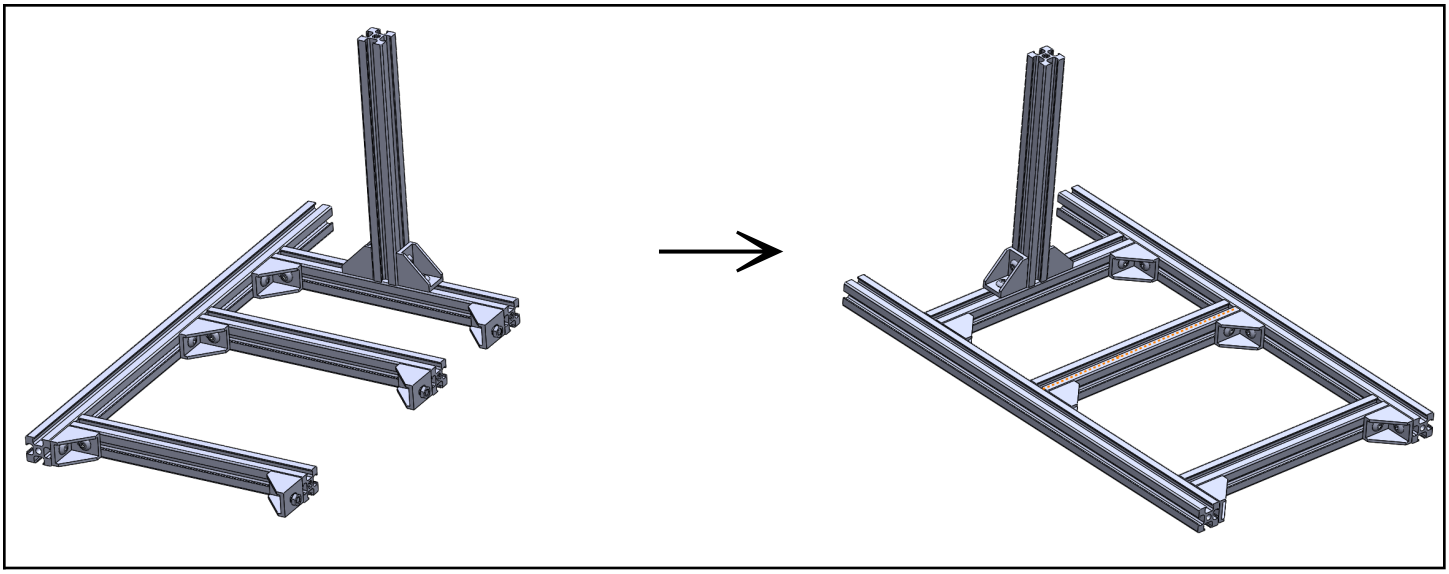

Figure 18: Completed clawbot frame

D.8 Attaching the wheel assemblies

Each of the four wheel assemblies can be slid into the bottom slots of the 12" extrusions. When sliding into place, ensure that the wheels are towards the outside of the frame. Using one of the short motor wires from the kit, approximate the spacing between the front and rear wheels. This wire is the limiting factor as it will eventually run between them. Do not connect the wire yet, as the motors will be configured in a later step.

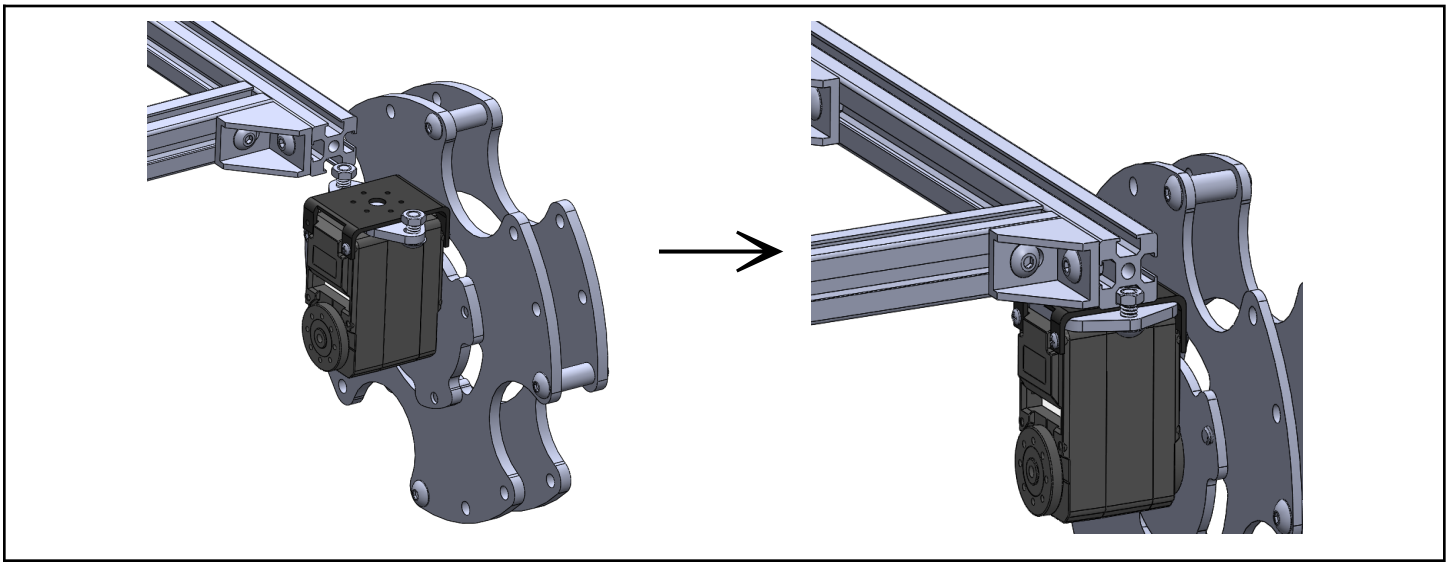

Figure 19: Wheel assembly attachment

Once a motor is in position, tighten both of the bolts to lock the motor in place. Note that the motors can slide in the slot if repositioning is necessary later.

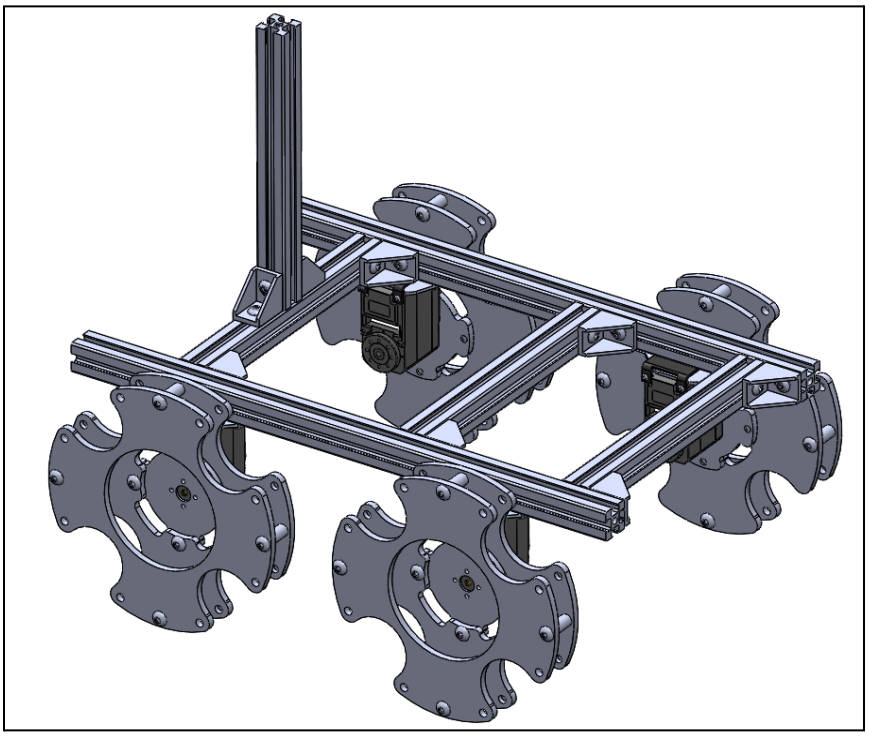

Figure 20: Clawbot frame with wheels

D.9 Constructing the arm and claw

The Iris Clawbot arm consists of two joints: a shoulder joint that moves the arm from the vertical support and a jaw joint that opens and closes the claw. Each joint consists of a motor and various brackets designed to work together to form the arm.

1. **Assemble the fixed portion of the claw.** Attach the fixed jaw top plate to one bottom jaw plate using six 1/4" bolts, two 1" standoffs, and two narrow hex nuts. Two of the bolts and nuts combine to attach the fixed portion of the claw to the end of the arm (in step 5 below).

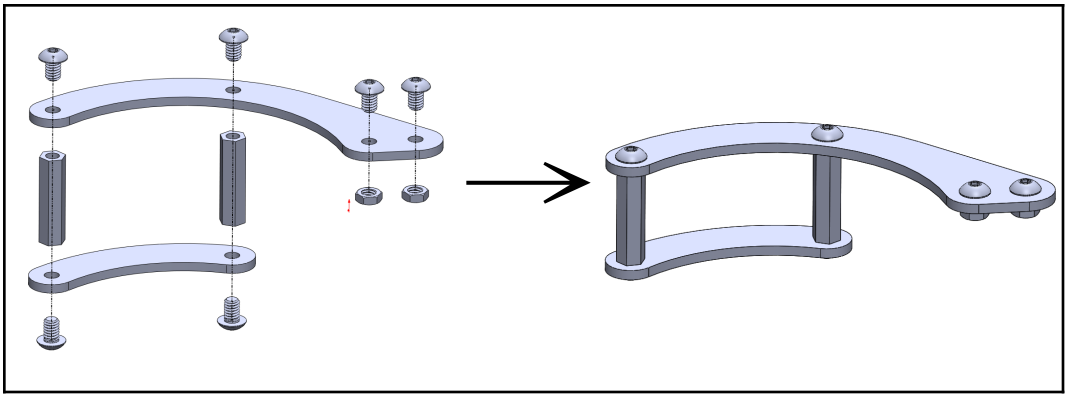

Figure 21: Fixed claw assembly

2. **Assemble the mobile portion of the claw.** Attach the mobile jaw top plate to one bottom jaw plate using four 1/4" bolts and two 2" standoffs. Attach one driving motor coupler to the claw using four 2mm x 6mm motor bolts, which will cut their own threads into the plastic motor coupler. See section D.3 of this appendix.

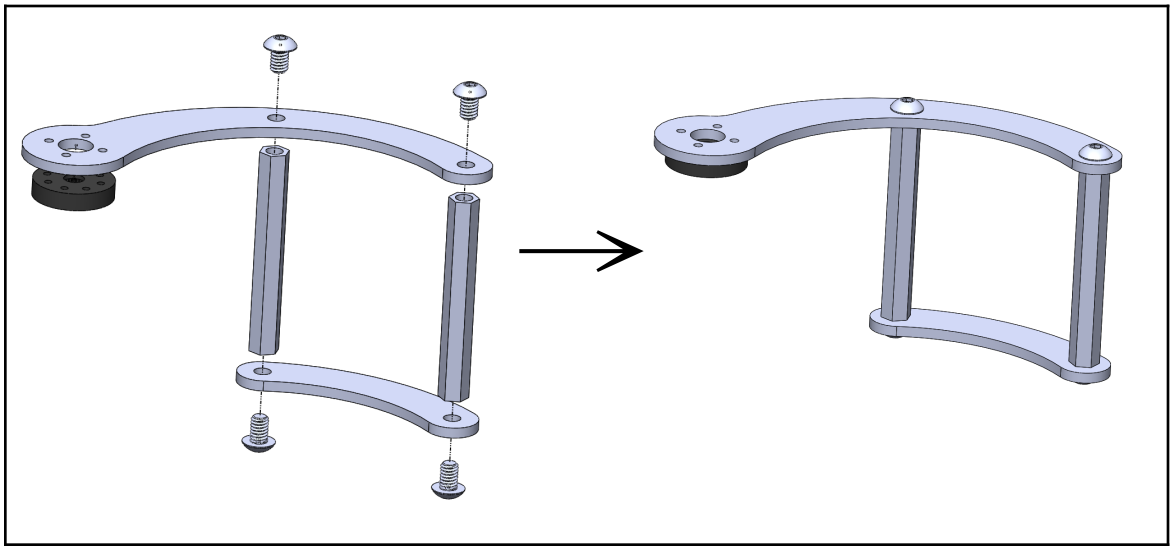

Figure 22: Mobile claw assembly

3. **Assemble the shoulder joint.** The shoulder joint is made up of one motor, two motor attachment plates, two motor mounting brackets, one 6" extrusion, one driving motor coupler, and one driven motor coupler.
    a. Attach the black motor mounting bracket with the white motor attachment plate to a 6" extrusion, which will become the clawbot arm. Note that the black metal bracket is not symmetrical and should be positioned as shown in Figure 23A. The metal bracket will slightly block one of the two connector ports on the back of the motor. Prior to attaching the motor to the bracket with four short silver screws, insert a motor wire into this port for use later.
    b. Slide another 'U' shaped metal motor bracket with motor attachment plate onto the end of the motor. Both a driven and a driving coupler should be in position. Attach the motor bracket with 3 short silver screws to the driven coupler and with 3 screws to the driving coupler. See Figure 23B.
    c. Attach the side motor bracket to the motor using four short, silver screws (2 not shown on the back side of the motor.) See Figure 23C.
    d. Slide the shoulder onto the front slot of the vertical extrusion. See Figure 23D. The height from the ground can be finalized later.

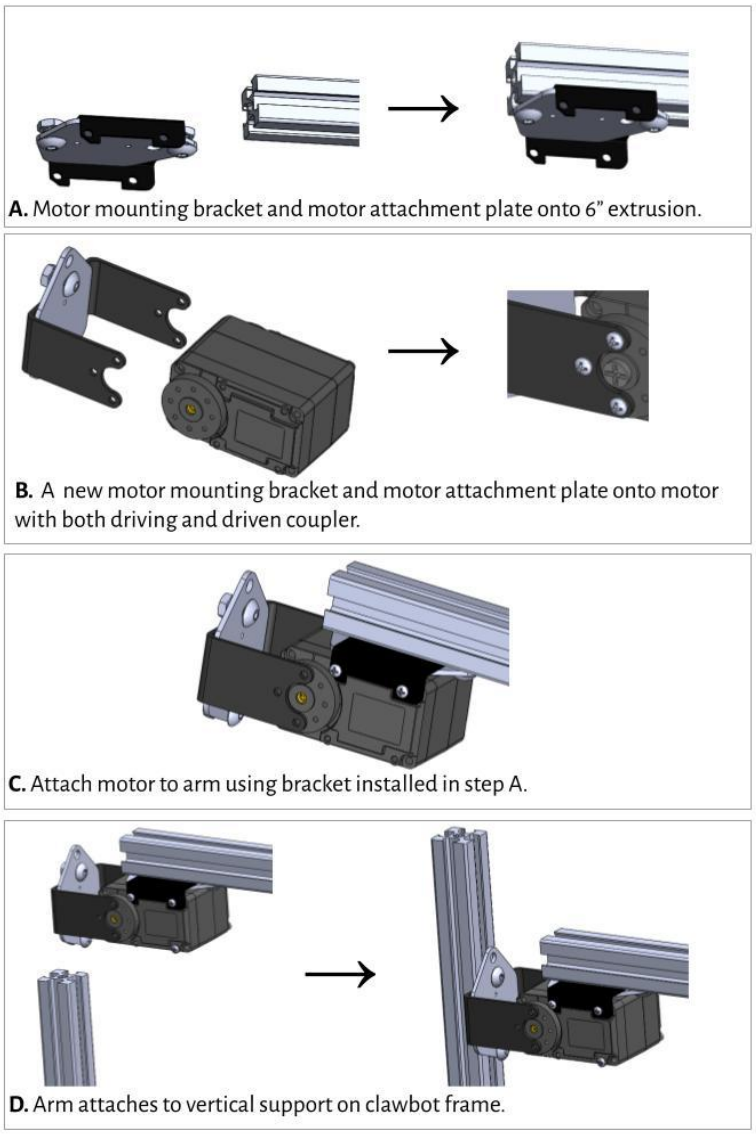

Figure 23: Shoulder joint assembly

4. **Assemble the wrist joint.** The wrist joint is made up of one motor, one motor attachment plate, one motor mounting bracket, the fixed claw from step 1, and the mobile claw from step 2.
    a. Attach the black motor mounting bracket with the white motor attachment plate to the opposite end of the clawbot arm. Note that the black metal bracket is not symmetrical and should be positioned as shown in Figure 24A. Tighten to extrusion before attaching motor.
    b. The motor should be mounted to the bracket with the brass output shaft towards the top of the arm extrusion. The end of the motor should approximately line up with the end of the extrusion.
    c. Attach the mobile portion of the claw to the motor. The driving coupler on the claw will be attached to the brass side of the motor using a 3mm black coupler attachment bolt..
    d. Attach the fixed claw portion of the claw to the arm extrusion by sliding in the hex nuts and tightening.

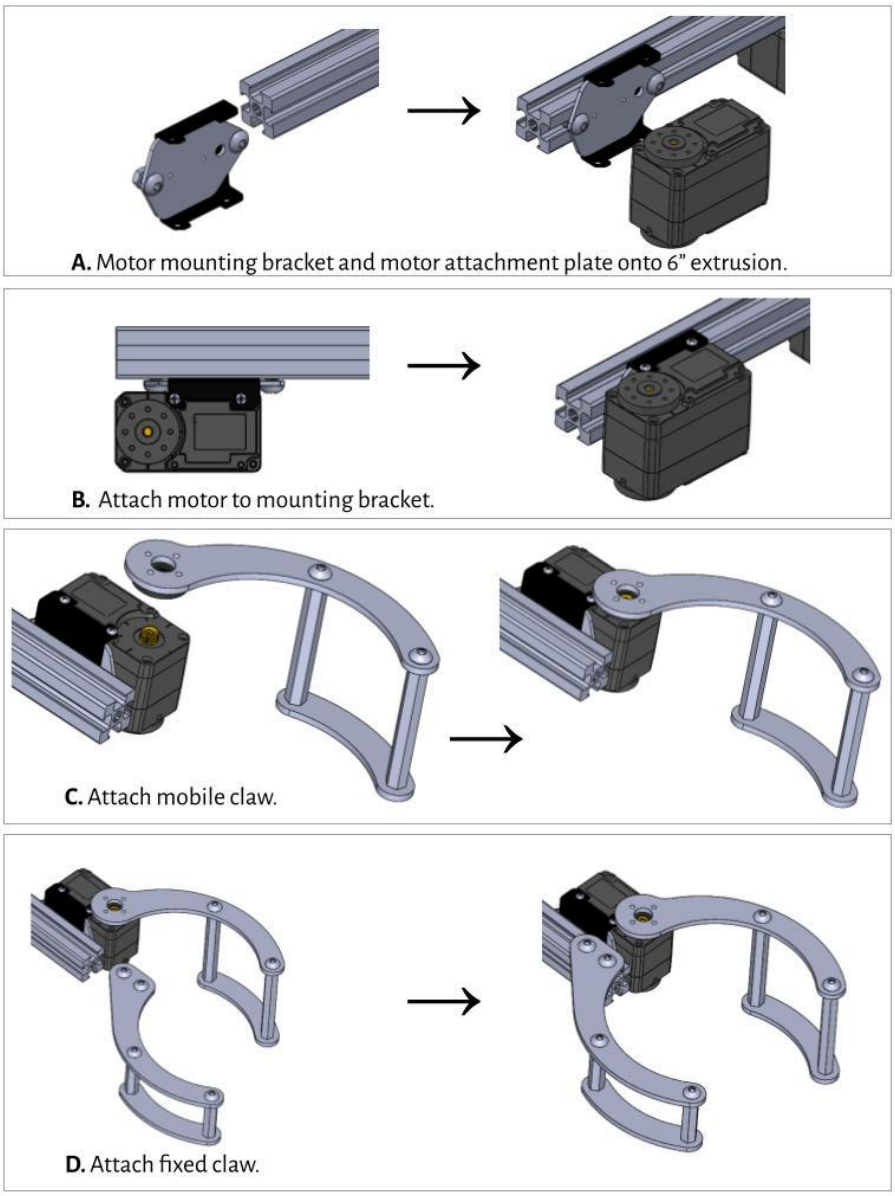

Figure 24: Wrist joint assembly

D.10 Install the Iris Clawbot program code to the Iris board

The Iris Clawbot program requires the following two Arduino libraries to be downloaded from Github:

1. **https://github.com/HigherOrderInnovation/IRIS_robot**
2. **https://github.com/aed3/PS4-esp32**

For more information regarding Arduino libraries refer to section 1.4 step 5 of the Introduction to Iris Robot Platform ebook.

The Iris Clawbot program is included in the Iris Robot library as an example. To open go to File > Examples > IRIS Robot > Clawbot. Note you will need to scroll down to Examples from Custom Libraries to find the Iris example programs. For more information regarding uploading an Arduino program to the Iris board refer to section 1.5 of the Introduction to Iris Robot Platform ebook.

D.11 Configure and wire the motors

Each of the motors in the kit are digital servo motors. Rather than all of the motors being required to be wired directly into the brain, each motor can be chained together (motor 3 → motor 2 → motor 4 → dock). To achieve this, each motor is assigned an ID value from 0-254. When they come out of the box, they all have the same ID assigned to them. To update these motor IDs we will use the Iris Clawbot program code that you installed on the Iris board.

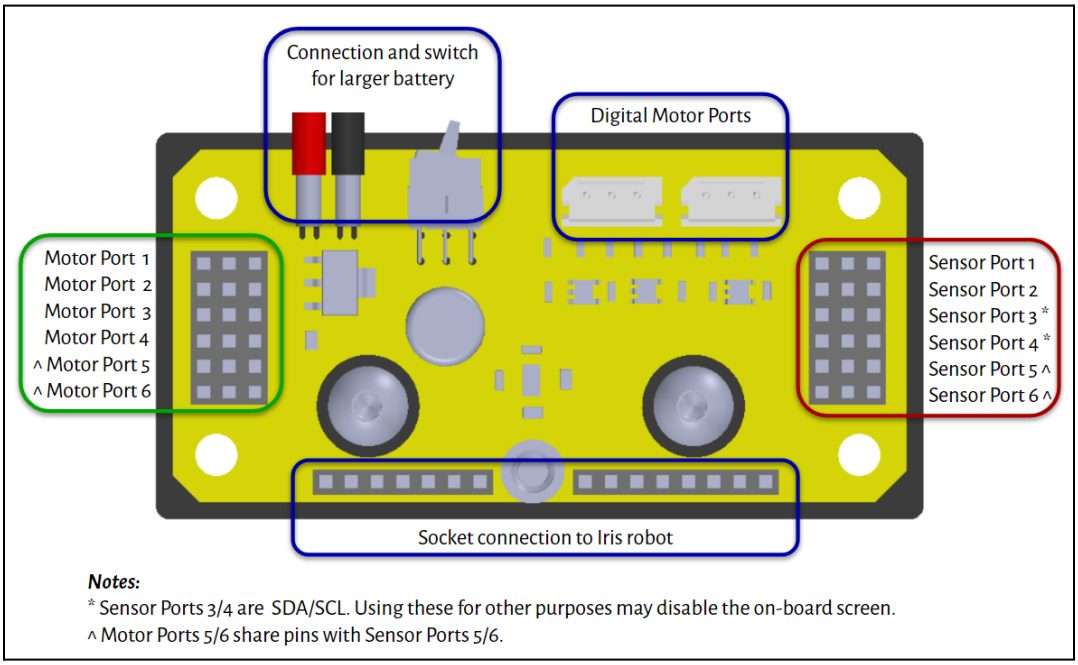

Figure : Iris dock

Follow the steps below to configure the motors: Motors 1/2 are the right drive wheels, motors 3/4 are the left drive wheels, motor 5 is the shoulder, and motor 6 is the claw.

1. Attach Iris to the dock. Remove the front leg and use the same bolt to attach the dock. Note that the pins on the bottom of Iris need to line up with the socket connections on the dock. See Appendix A: Iris Dock of the Introduction to Iris ebook for more information.
2. Remove the AA batteries from Iris and plug in the NiMh battery into the dock.
3. On top of Iris is a square pushbutton. While pressing the button down, use the switch on the dock to turn Iris ON. This will cause the robot to boot up in motor configuration mode.
4. Follow the on-screen instructions. Starting with motor 1, each motor will be plugged into the dock one at a time. After configuring each motor, label it using a marker or tape.
5. Once all motors have been configured, reset Iris by switching it off and back on.

Follow the steps below to wire the motors: Use the short motor cables to wire the robot. Note that the two digital motor ports on the Iris Dock as well as the two ports on the back of the motors are identical and can be used interchangeably. Two separate cable chains will be run from Iris.

1. The first chain starts from Iris and connects to any of the wheels. This chain then continues wheel to wheel until all four are connected.
2. The second chain starts from Iris and connects up to the shoulder and then to the claw. Make sure that for your chosen position of Iris and chosen height of the shoulder motor that the cable is not pulled on through the full range of motion of the arm. If it is tight, the shoulder motor can be loosened and lowered down the vertical extrusion. The cable from the shoulder motor to the claw can be twisted around the arm extrusion to clean up any slack that is present.

D.12 Attach Iris Dock and Iris Robot to Clawbot

The two hex nuts that were included in the middle crossmember during the frame assembly are for attaching Iris to the clawbot. Two ½" bolts were included in the kit for attaching the dock to the frame. They can be found in the bag that contained the small black Iris wheels. These two bolts are enough to support the dock as well as Iris.

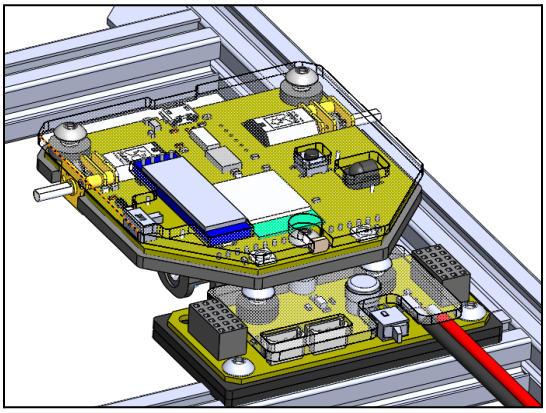

Figure: Iris attached to dock on clawbot

D.13 Special notes for the full Open Robotics Kit

- The white wheel hub can be used to attach your custom wheels to the motors. The motor attachment yoke is also provided for more generic motor attachment.

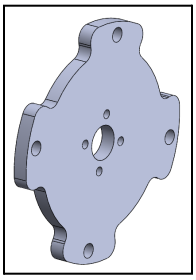

Figure: Wheel hub

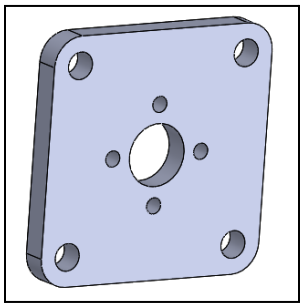

Figure: Motor attachment yoke

- Hex head bolts are included in the kit. The head of these bolts will slide into the aluminum framing, allowing the attachment of threaded standoffs or other materials.

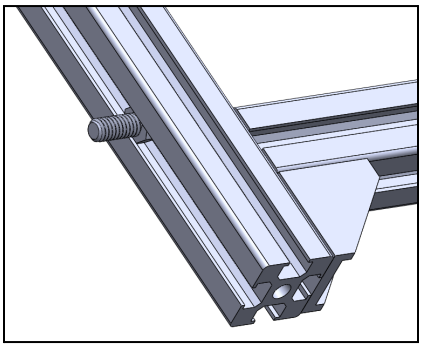

Figure: Aluminum framing with hex head bolts

- A bolt can be threaded into the center of the end of the extrusion. In this position, the bolt will cut its own thread as it tightens. After the threads are cut, this hole will accept a bolt like any other.

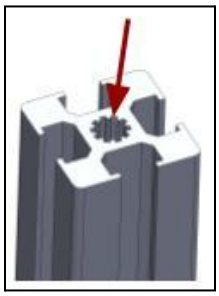

Figure: Center of aluminum extrusion

- Notice that the motors are being used as both continuous rotation and as positional servos, with the only difference being the software.